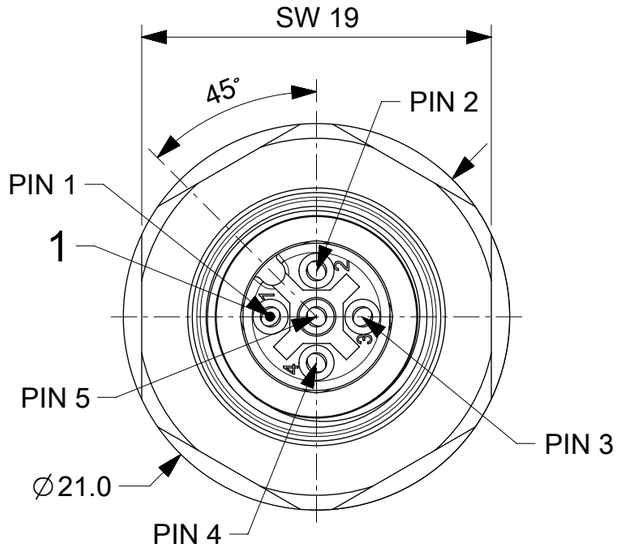

FEMALE FRONT FACE VIEW

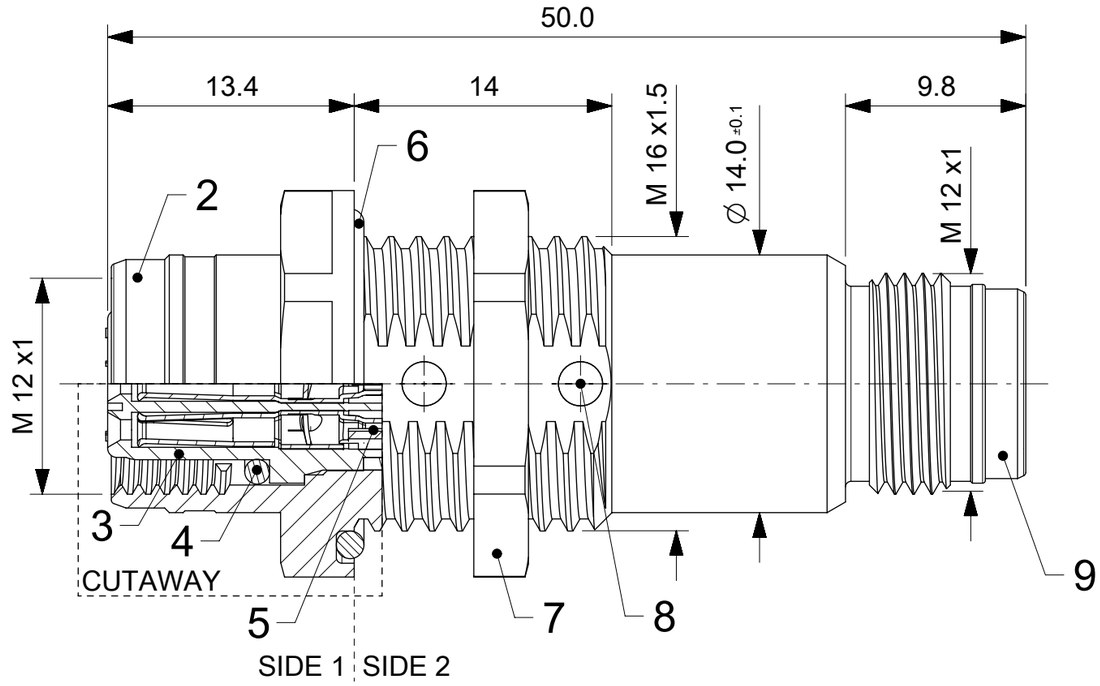

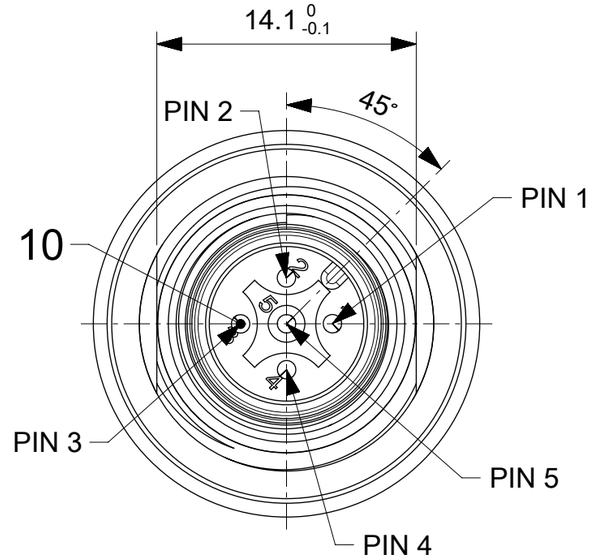

MALE FRONT FACE VIEW
(WITHOUT LOCK NUT)

WIRING DIAGRAM

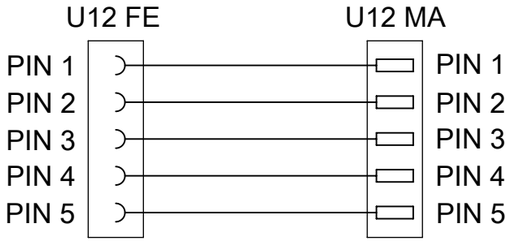

NOTES:

CONTACT CURRENT RATING: 4A
VOLTAGE RATING: 60V
TEMPERATURE: -25°C / +85°C
INTERNATIONAL PROTECTION: SIDE 1 - IP 67/68/69K
SIDE 2 - IP65

Panel Cutout
Scale 2:1

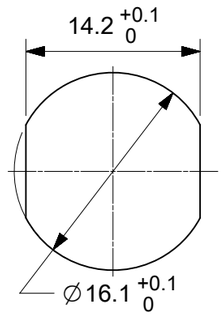

ITEM	QTY.	DESCRIPTION	MATERIAL	FINISH
10	5	CONTACT M12 MALE	BRASS	SELECTIVE Au OVER Ni
9	1	INSERT MALE 5P AC BLACK	PA	---
8	-	POTTING MATERIAL 2-CMPT	PUR-BASE	---
7	1	LOCKNUT SW19 M16x1.5	BRASS	NICKEL
6	1	ORING ∅16mm BLACK	EPDM	---
5	-	WIRE 0.35mm²	PVC	---
4	1	ORING ∅7.1mm RED	FPM	---
3	1	INSERT FEMALE 5P AC BLACK	PUR	---
2	1	SHELL U12/M16/U12	BRASS	NICKEL
1	5	CONTACT M12 FEMALE	BRONZE	SELECTIVE Au OVER Ni

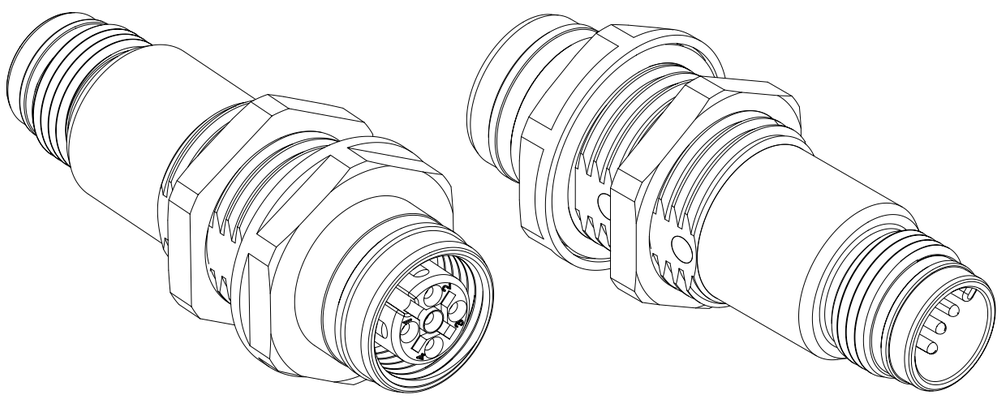

SCALE 2:1

THIS DRAWING CONTAINS INFORMATION THAT IS PROPRIETARY TO MOLEX ELECTRONIC TECHNOLOGIES, LLC AND SHOULD NOT BE USED WITHOUT WRITTEN PERMISSION

QUALITY SYMBOLS
FA = 0
FC = 0
FP = 0
▼ = 0
C = 0
☒ = 0
■ = 0
C = 0

EC NO: 110653 2016/11/16
DRWN: JMARSZALEK
CHK'D:
APPR: RSILLER 2016/11/22

A1 REV

GENERAL TOLERANCES (UNLESS SPECIFIED)
ANGULAR TOL ± 1.0 °

4 PLACES	±
3 PLACES	±
2 PLACES	± 0.05
1 PLACE	± 0.3
0 PLACES	± 0.5

DRAFT WHERE APPLICABLE MUST REMAIN WITHIN DIMENSIONS

DIMENSION UNITS: MM
SCALE: 3:1
DRWN BY: JMARSZALEK
DATE: 2016/08/10
CHK'D BY:
DATE:
APPR BY: RSILLER
DATE: 2016/08/29
DRAWING SIZE: A3
THIRD ANGLE PROJECTION

molex®

REC U12 U12 5P AC FE MA M16 BULKHEAD

PRODUCT CUSTOMER DRAWING

SERIES	MATERIAL NUMBER	CUSTOMER
120084	1200848168	GENERAL MARKET

DOCUMENT NUMBER	DOC TYPE	DOC PART	SHEET NUMBER
1200848168	PSD	000	1 OF 1

RELEASE STATUS	P1	RELEASE DATE	22.11.2016 13:31:37

FORMAT: master-tb-prod-A3
REVISION: G
DATE: 2015/12/14