Part Number: 1200710043
Status: Active
Overview: Brad Micro-Change (M12) Connectors
Description: Micro-Change (M12) Single Keyway with PG9 Cable Fitting, Straight Female, 5 Poles, Cable Diameter 4.10-8.10mm

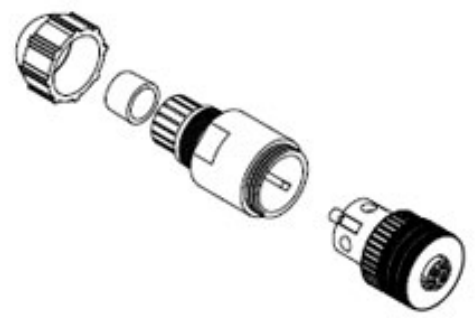

Series image - Reference only

Documents:
Drawing (PDF)
RoHS Certificate of Compliance (PDF)

Agency Certification

CSA	LR6837

General

Product Family	Field Attachable / Accessories
Series	120071
Approvals	cCSAus certified
IP Rating	IP67
Material - Contact	Brass
Overview	Brad Micro-Change (M12) Connectors
Product Name	Micro-Change (M12)
Type	Field Attachable Connector
UPC	78172553111

Physical

Cable Diameter	4.10 - 8.10mm (.161-.319")
Coupling Type	Internal Thread
Diagnostics / LEDs	No
Diagnostics Port	No
Gender	Female
Keyway	Single
Material - Connector Body	PA
Material - Coupling Nut	Nickel-plated Brass
Material - Plating Mating	Silver
Net Weight	36.730/g
Orientation	Straight
Poles	5
Temperature Range - Operating	-25°C to +90°C
Wire Size AWG	18

Electrical

Current - Maximum per Contact	4.0A
Voltage - Maximum	30V AC / 36V DC

Material Info

Engineering Number	8A5000-32

Reference - Drawing Numbers

Sales Drawing	SD-120071-006

EU ELV
Not Relevant

EU RoHS
Compliant with Exemption 6(c)

China RoHS

REACH SVHC
Not Contained Per - ED/30/2017 (7 July 2017)

Halogen-Free Status
Low-Halogen

Need more information on product environmental compliance?

Email productcompliance@molex.com
Please visit the Contact Us section for any non-product compliance questions.

China ROHS	50 Image
ELV	Not Relevant
Prop65	Duty-To-Declare
PropRisk	Cancer
PropRisk	Developmental toxicity
PropRisk	Reproductive toxicity
PropSub	Lead and its compounds
RoHS Phthalates	Not Contained

Search Parts in this Series
120071 Series